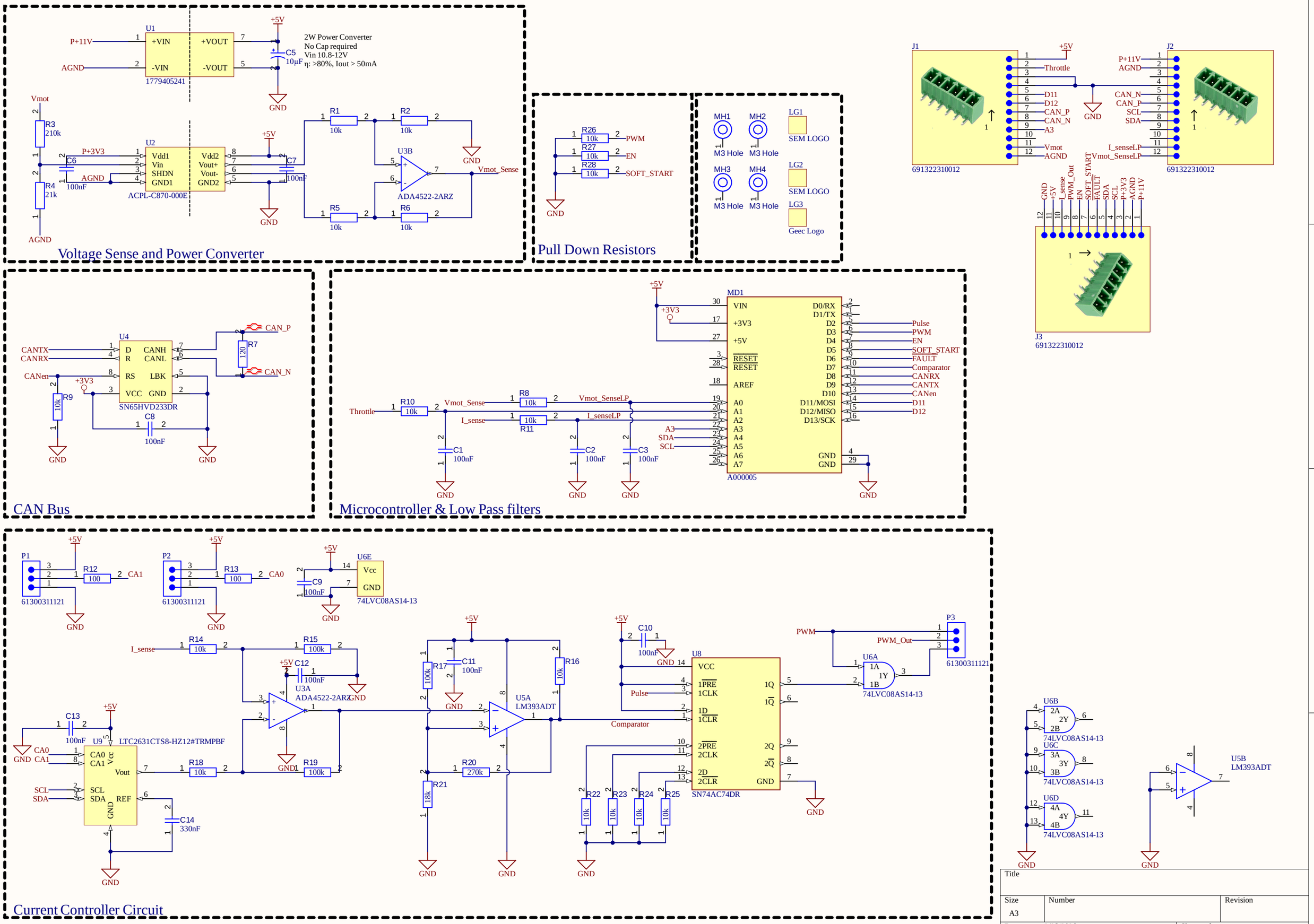

Title		
Size A3	Number	Revision
Date: 2/23/2026		Sheet of
File: C:\Users\..\PC.SchDoc		Drawn By:

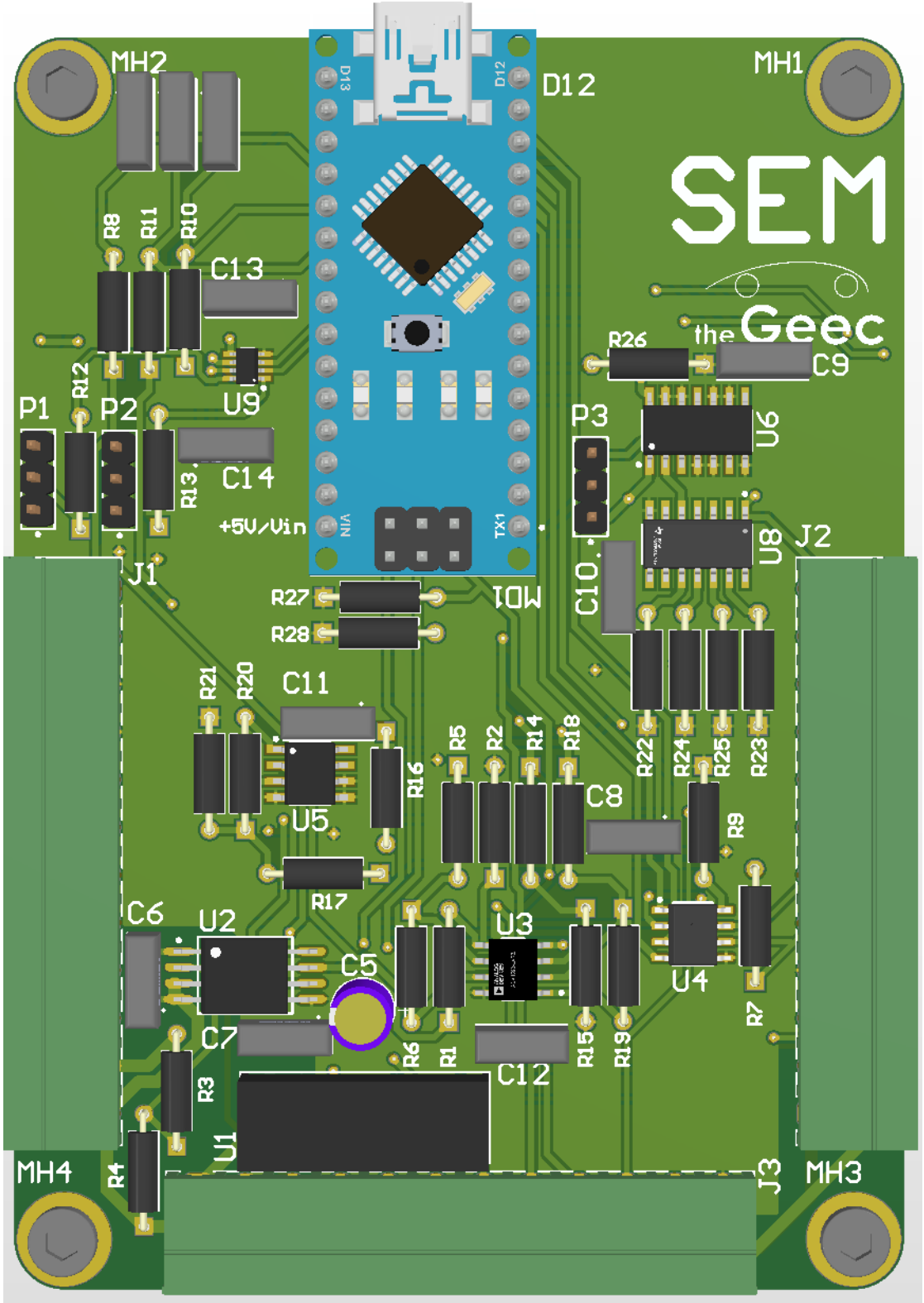

MH2
MH1
D12
SEM
the Geec
R8
R11
R10
C13
R26
C9
R12
U9
P1
P2
P3
U6
C14
R13
+5V/Vin
U8
J2
J1
C10
R27
R28
MD1
R21
R20
C11
R5
R2
R14
R18
R22
R24
R25
R23
R16
C8
U5
R9
R17
C6
U2
U3
C5
U4
R7
C7
R6
R1
R15
R19
C12
R3
U1
MH4
R4
J3
MH3

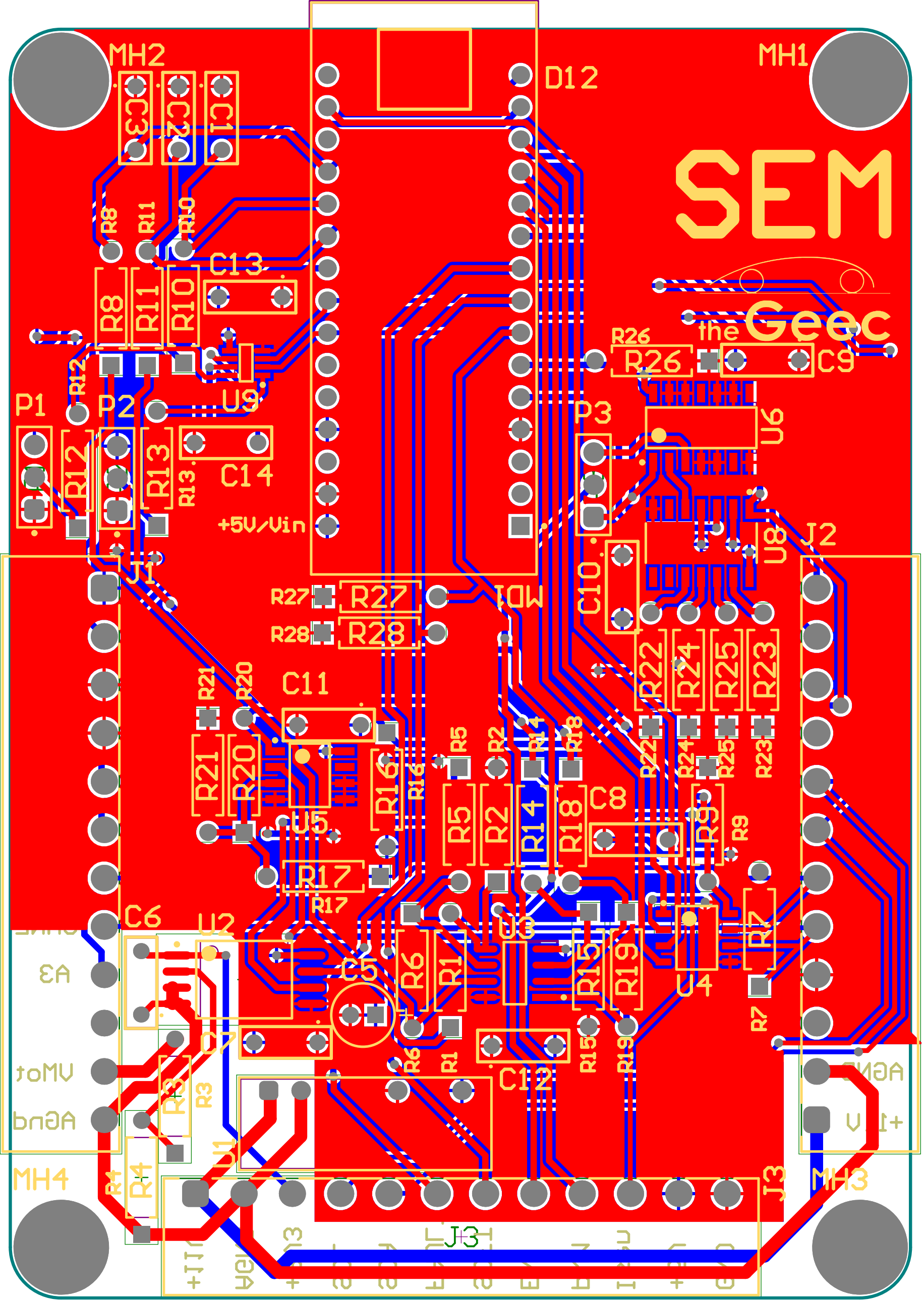
MH2
MH1
D12
SEM
the Geec
C3
C2
C1
R8
R11
R10
C13
R12
P1
P2
U9
R13
C14
+5V/Vin
R26
C9
P3
U6
U8
J2
C10
R27
R28
IOW
R22
R24
R25
R23
R21
R20
C11
R16
R5
R2
R14
R18
C8
R9
U5
R17
C6
U2
C5
R6
R1
U3
R15
R19
U4
R7
C7
C12
R3
U1
R4
MH4
MH3
J3

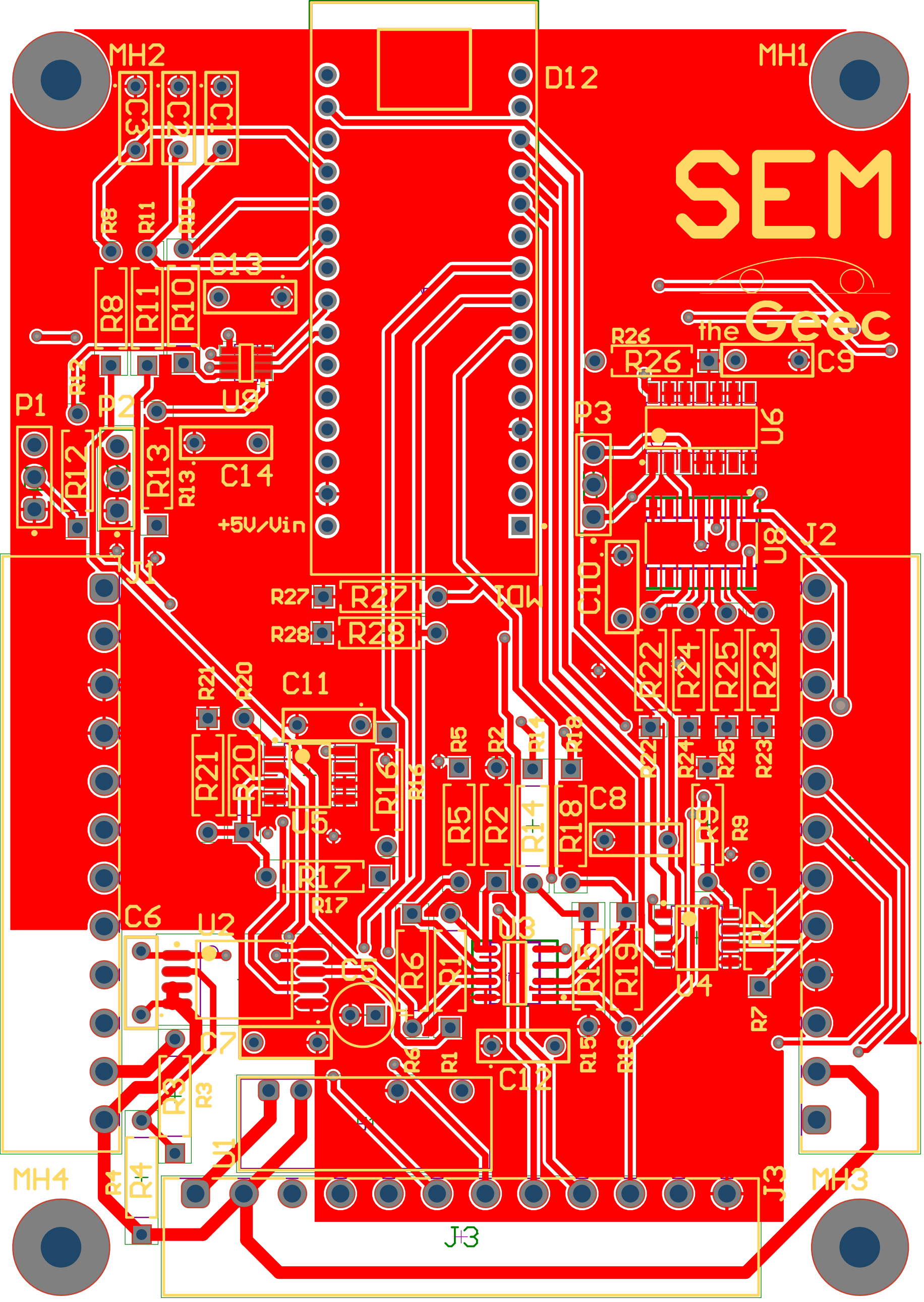

MH2
MH1
D12
SEM
the Geec
C3
C2
C1
R8
R11
R10
C13
R26
C9
P1
P2
U9
P3
U6
R12
R13
C14
+5V/Vin
J1
J2
U8
C10
R27
R28
IOW
R22
R24
R25
R23
C11
R21
R20
R16
R5
R2
R14
R18
C8
U5
R9
R17
C6
U2
U3
R6
R1
R15
R19
U4
R7
C5
C7
C12
R3
U1
R4
MH4
MH3
J3

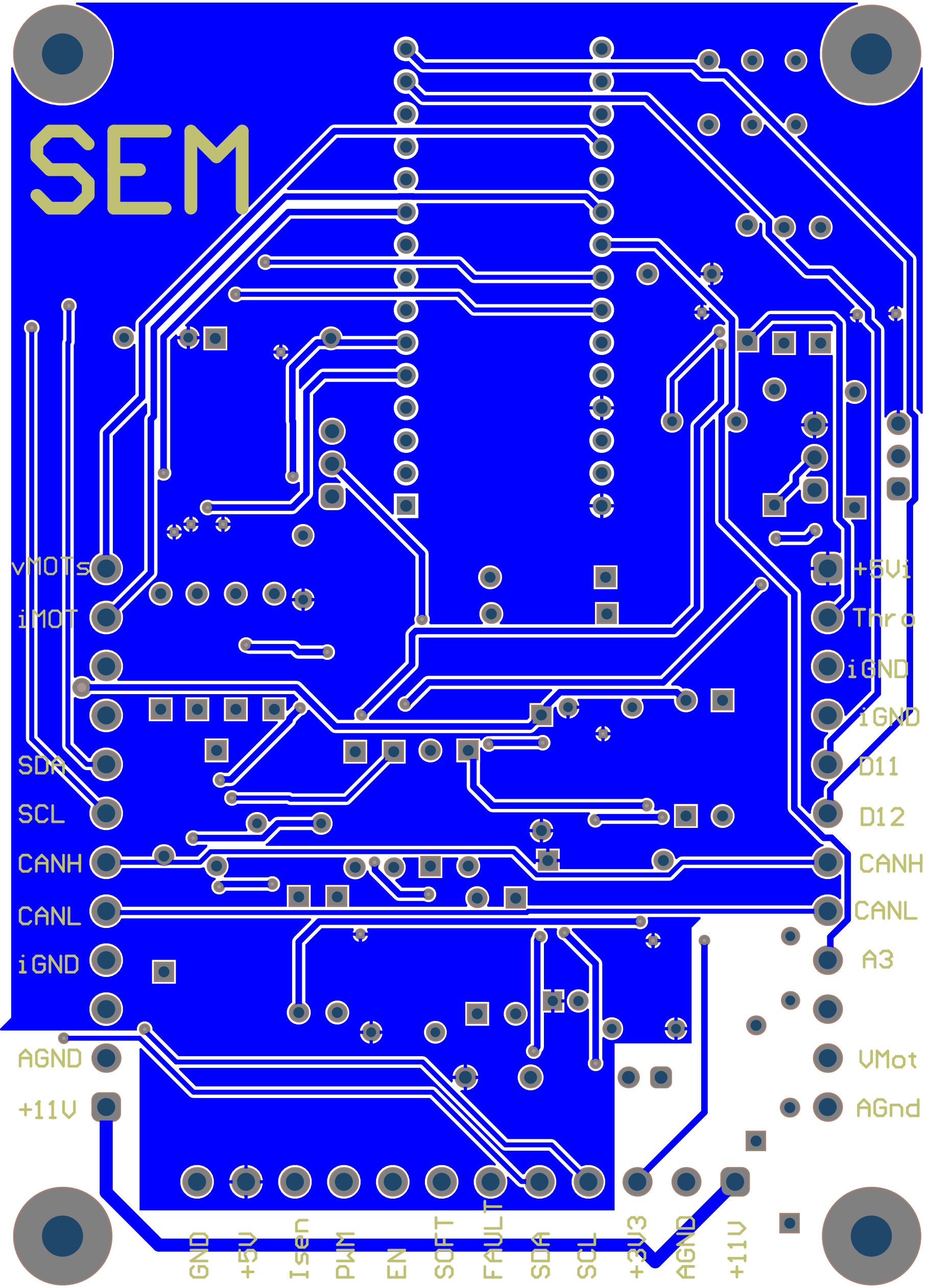
SEM
vMOTs
iMOT
SDA
SCL
CANH
CANL
iGND
AGND
+11V
+5Vi
Thro
iGND
iGND
D11
D12
CANH
CANL
A3
VMot
AGnd
GND
+5V
Isen
PWM
EN
SOFT
FAULT
SDA
SCL
+3V3
AGND
+11V